1. Introduction

This manual provides detailed instructions for the installation, operation, and maintenance of your SANWA JLF-TP-8YT Joystick. Designed for both arcade machines and home console controllers, this high-quality joystick offers precise control and durability. Please read this manual thoroughly before installation and use to ensure optimal performance and longevity of your product.

Figure 1: SANWA JLF-TP-8YT Joystick (Red Ball Top)

2. Key Features

- Original Sanwa quality from Japan, ensuring reliability and performance.
- Compatible with control panels made of steel or plastic, up to 5mm thick.
- Features a solid spring and excellent 'Return to Center' mechanism for agile and precise movements.
- Switchable operation between 4-way and 8-way modes, adaptable for various game types.
- Durable and firm construction for extended use.
- Ideal for fighting games and other joystick-intensive applications in arcade and home console setups.

3. Package Contents

Verify that all items listed below are included in your package:

- 1 x SANWA JLF-TP-8YT Joystick (with Red Ball Top)
- 1 x Harness (5-pin connection cable)
- Dust covers
- Mounting plate

Figure 2: Joystick and Harness

4. Specifications

Attribute	Detail
Model Number	JLF-TP-8YT-SK
Product Dimensions	4.33 x 3.15 x 2.76 inches (110 x 80 x 70 mm)
Item Weight	5.6 ounces (0.16 kg)
Operation Modes	4-way or 8-way (switchable)
Compatible Devices	PC, Windows, Arcade Cabinets, Home Console Joysticks
Connectivity Technology	USB (via compatible controller/adapter, not directly USB)

Attribute	Detail
Manufacturer	Sanwa

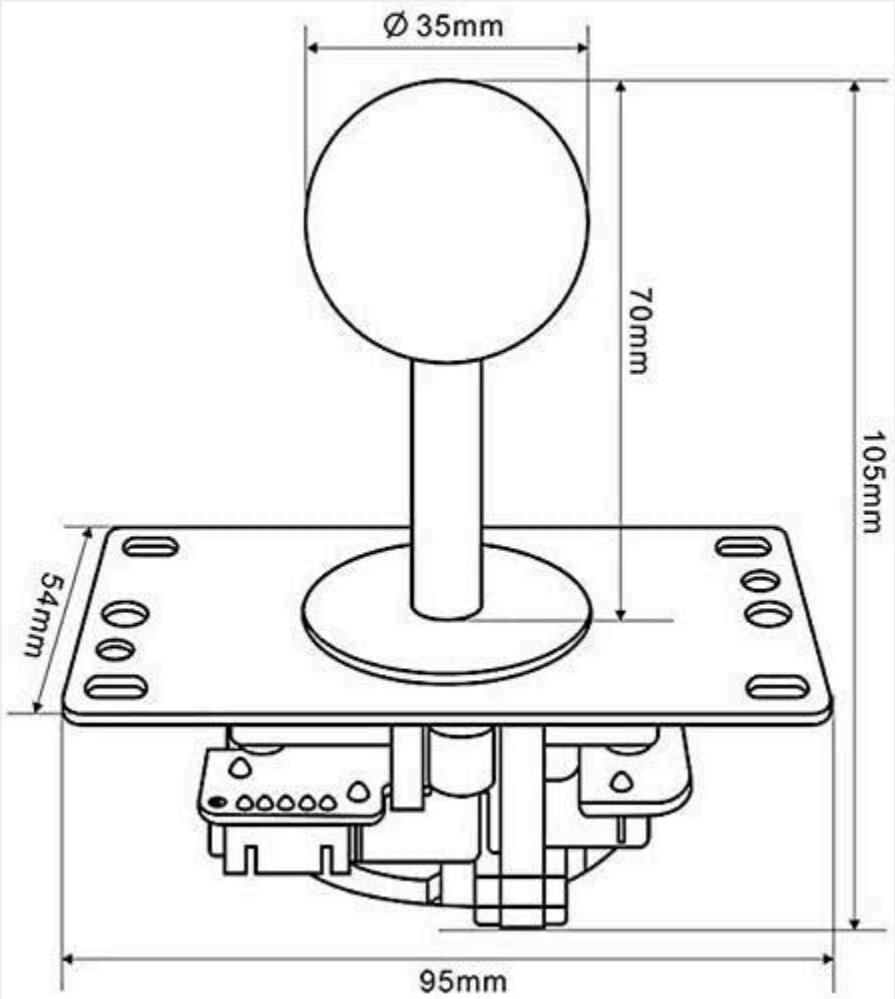

Figure 3: Dimensional Diagram

5. Setup and Installation

5.1 General Installation

The SANWA JLF-TP-8YT joystick is designed for easy integration into various arcade and custom controller setups. It is suitable for control panels with a maximum thickness of 5mm. Ensure you have adequate space and access to the underside of your control panel for mounting.

1. **Prepare Mounting Surface:** Ensure the mounting surface on your control panel is clean and has the appropriate holes for the joystick's mounting plate. The joystick comes with a mounting plate.
2. **Position Joystick:** Insert the joystick shaft through the top of the control panel. Align the mounting plate with the pre-drilled holes.
3. **Secure Mounting Plate:** Use appropriate screws (not included) to firmly attach the mounting plate to the underside of the control panel.
4. **Attach Ball Top:** Screw the ball top onto the joystick shaft from the top side of the control panel. Ensure it is tightened securely.

Figure 4: Joystick Components for Installation

5.2 Wiring Connection

The JLF-TP-8YT joystick uses a standard 5-pin connector for its directional inputs. This harness is included in the package.

1. **Connect Harness:** Plug the 5-pin harness into the corresponding port on the joystick's PCB (Printed Circuit Board) located on the underside.
2. **Connect to System:** Connect the other end of the harness to your arcade encoder board or custom controller's input system. Refer to your encoder's manual for specific wiring diagrams. Typically, the harness provides connections for Up, Down, Left, Right, and Ground.

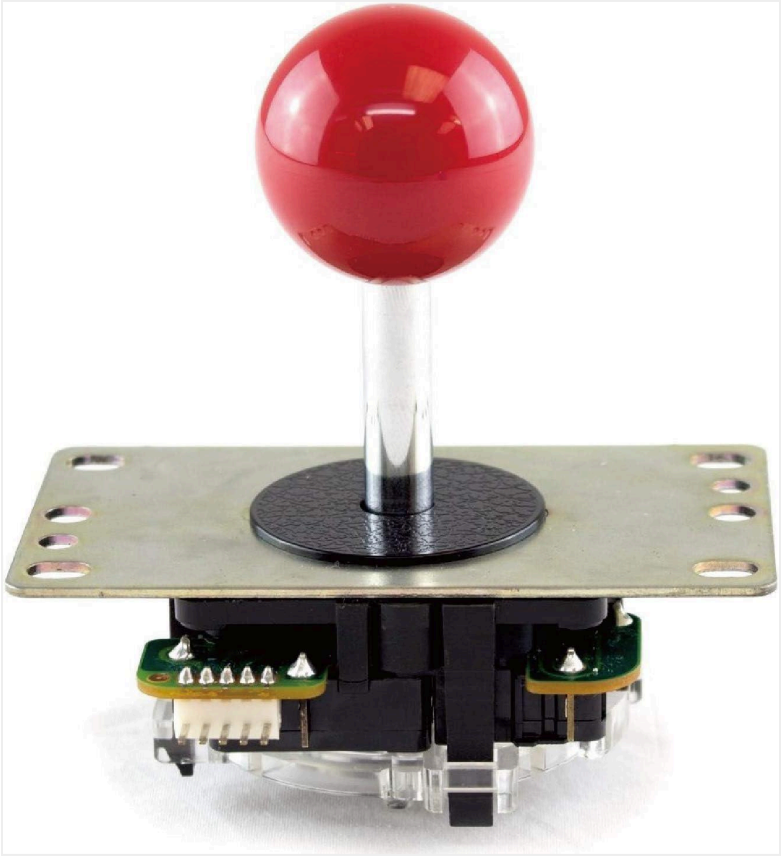

Figure 5: Joystick Underside with PCB

5.3 Switching Between 4-Way and 8-Way Operation

The JLF-TP-8YT features an adjustable restrictor plate that allows you to switch between 4-way (for games like Pac-Man) and 8-way (for fighting games) operation.

1. **Access Restrictor Plate:** Locate the square restrictor plate on the underside of the joystick, around the central pivot.
2. **Rotate for 4-Way:** To set to 4-way, rotate the restrictor plate so that the square opening aligns with the four cardinal directions (Up, Down, Left, Right). The corners of the square will block diagonal movement.
3. **Rotate for 8-Way:** To set to 8-way, rotate the restrictor plate so that the square opening allows for diagonal movement. The plate will typically click into place for each setting.
4. **Verify:** Test the joystick movement to ensure the desired mode is active.

Figure 6: Restrictor Plate (Bottom View)

6. Operation

Once installed and configured, the SANWA JLF-TP-8YT joystick operates like any standard arcade joystick. Its precise microswitches ensure accurate input registration.

- **Movement:** Move the joystick in the desired direction. The internal microswitches will activate, sending the corresponding signal to your game system.
- **Return to Center:** The joystick is designed with a strong spring for excellent 'Return to Center' functionality, ensuring the stick quickly returns to a neutral position when released.
- **Responsiveness:** The short travel distance and light spring pressure allow for quick and precise command inputs, which is particularly beneficial for competitive gaming.

7. Maintenance

Proper maintenance will extend the lifespan and ensure consistent performance of your joystick.

- **Cleaning:** Periodically wipe down the ball top and joystick shaft with a soft, dry cloth. Avoid using abrasive cleaners or solvents.
- **Dust Covers:** Ensure the included dust covers are properly seated to prevent dust and debris from entering the joystick mechanism.
- **Inspection:** Occasionally inspect the wiring harness for any signs of wear or damage. Ensure all connections remain secure.
- **Lubrication:** The joystick is designed for long-term use without requiring lubrication. If movement feels stiff over time, consult professional arcade parts technicians.

8. Troubleshooting

Problem	Possible Cause	Solution
Joystick not responding or intermittent input.	Loose wiring connection; faulty microswitch; incorrect wiring.	Check all 5-pin harness connections. Ensure wires are securely attached to the encoder. Verify correct wiring polarity if custom wiring was done. If a specific direction fails, the corresponding microswitch may need replacement.
Joystick feels "creaky" or stiff.	Dust/debris accumulation; restrictor plate misalignment; worn components.	Clean around the shaft and restrictor plate. Ensure the restrictor plate is properly seated and not loose. If the issue persists, internal components may be worn.
Joystick does not return to center properly.	Weakened spring; obstruction.	Inspect for any physical obstructions. The spring may need to be replaced if it has lost tension over time.
Difficulty with diagonal inputs in 8-way mode.	Restrictor plate set to 4-way mode.	Refer to Section 5.3 to ensure the restrictor plate is correctly configured for 8-way operation.

9. Warranty and Support

Specific warranty information for the SANWA JLF-TP-8YT Joystick is typically provided at the point of purchase or on the manufacturer's official website. Please retain your proof of purchase for any warranty claims.

For technical support or inquiries regarding replacement parts, please contact your retailer or visit the official SANWA website. You may also find helpful resources and community forums online dedicated to arcade parts and modifications.

Note: Unauthorized modifications or improper installation may void your product warranty.